REV. 1 | OCEANUS 24 VST | 80050-00001910

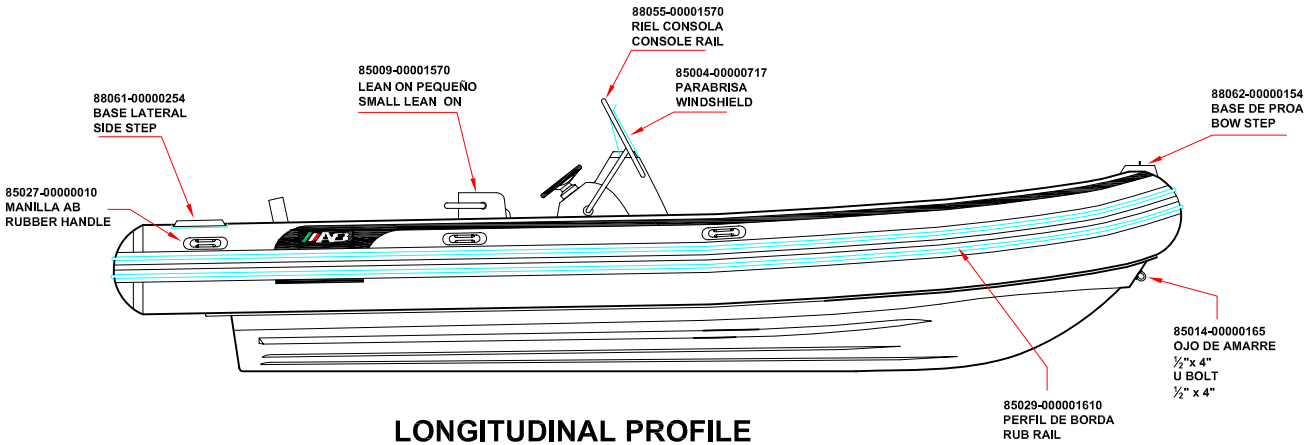

LONGITUDINAL PROFILE

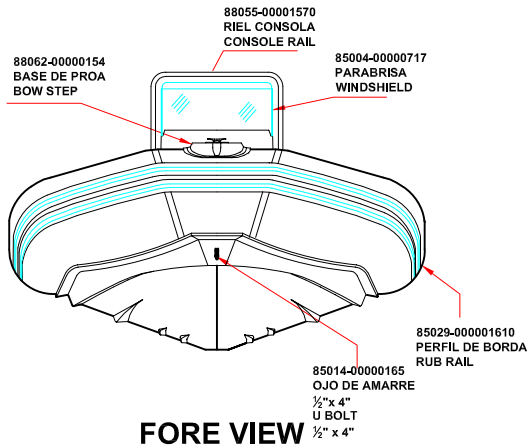

FORE VIEW

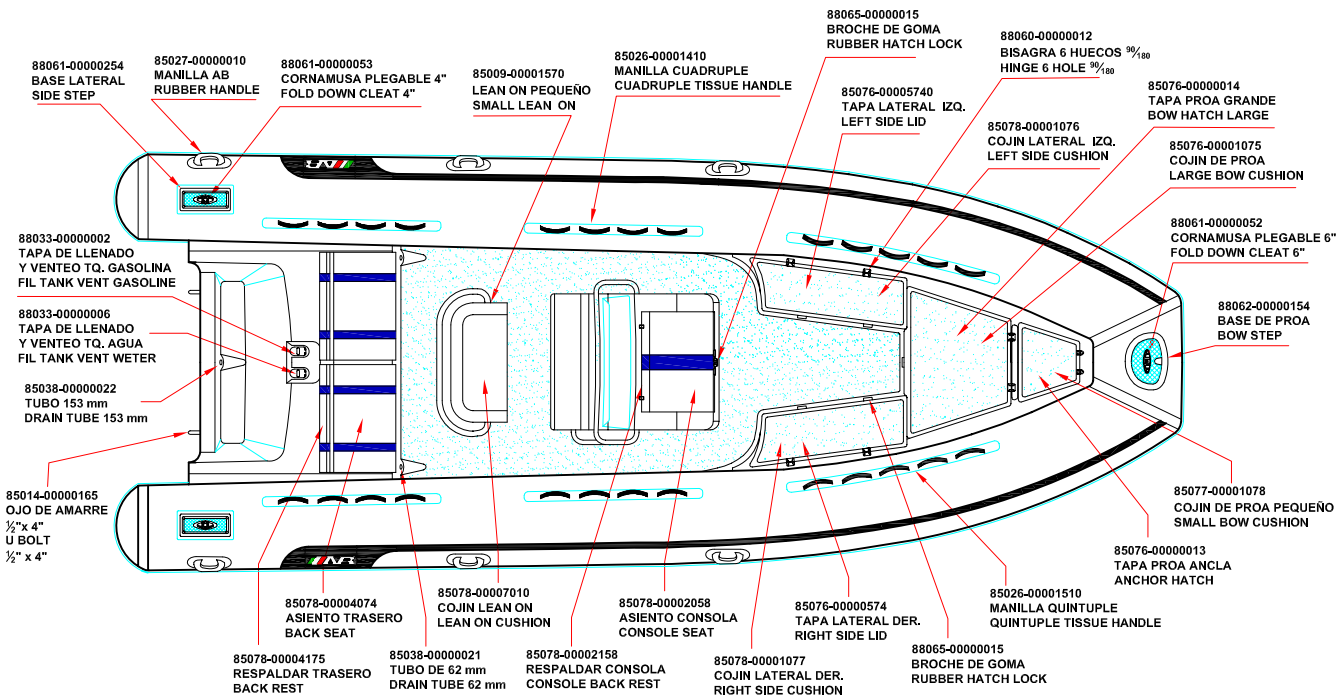

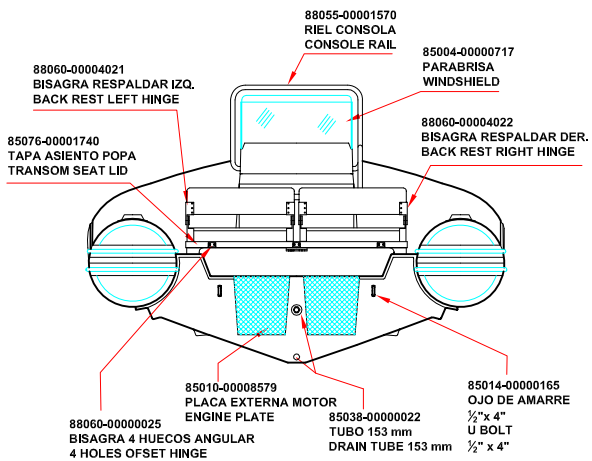

AFT VIEW