REV. 2

PROFILE A 21

320 - 8 - 37

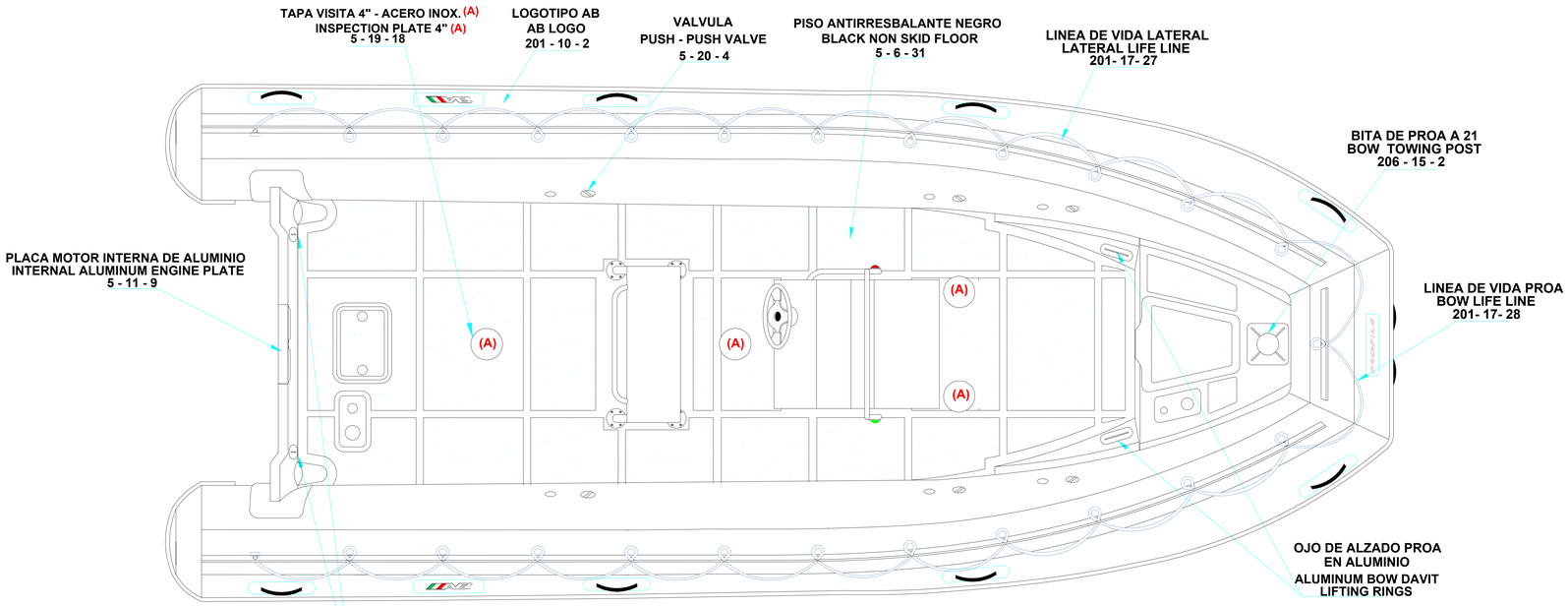

PLANT VIEW

VISTA SUPERIOR

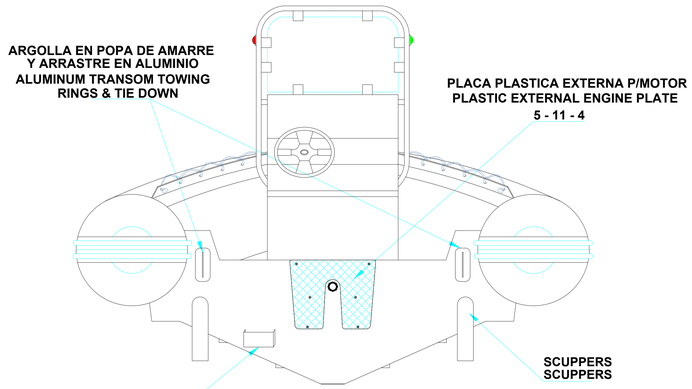

AFT VIEW

VISTA TRASERA

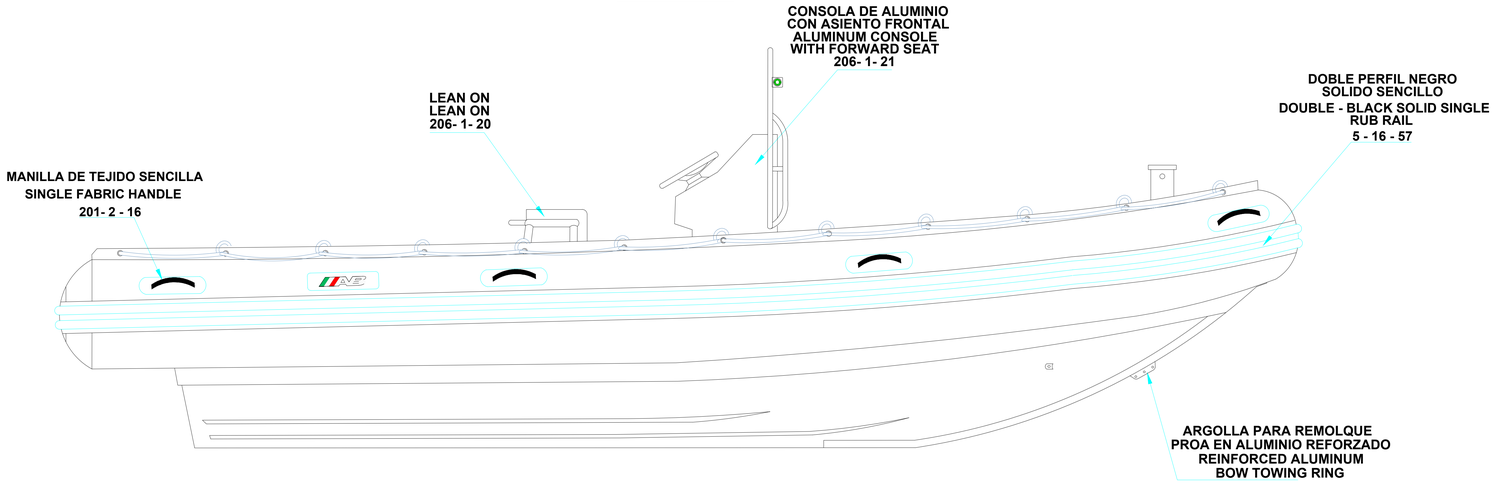

LONGITUDINAL PROFILE

VISTA LATERAL

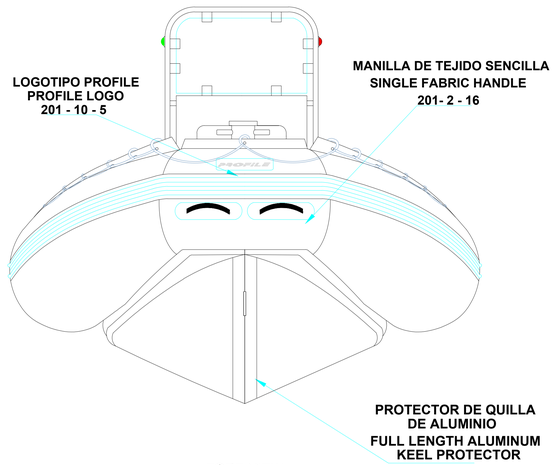

FORE VIEW

VISTA FRONTAL

NOTA: FAVOR INDICAR COLOR DEL BOTE AL ORDENAR / NOTE: MUST INDICATE BOAT COLOR WHEN ORDERING