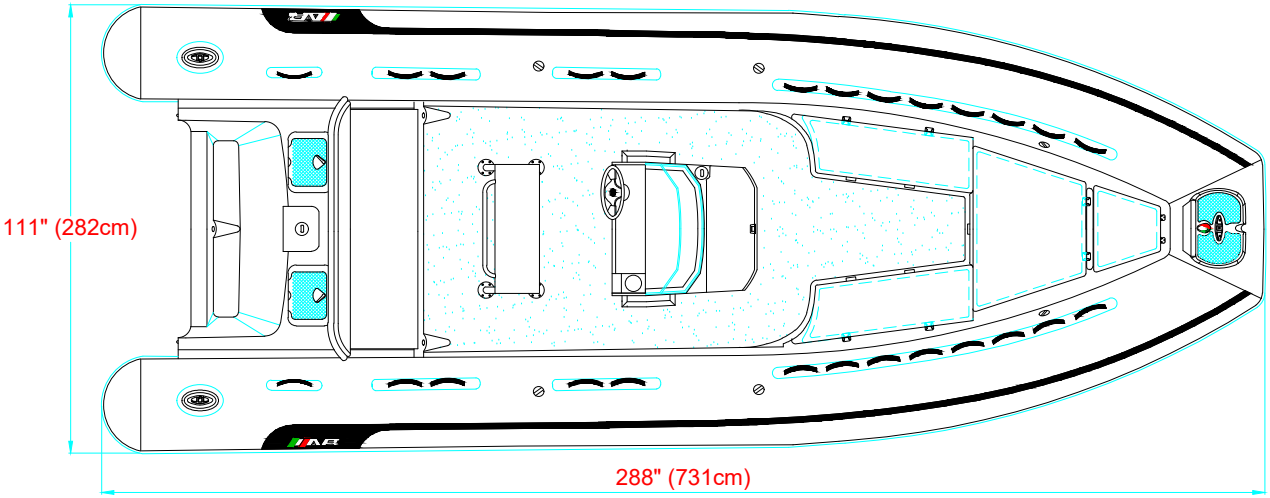

PLANT VIEW
VISTA SUPERIOR

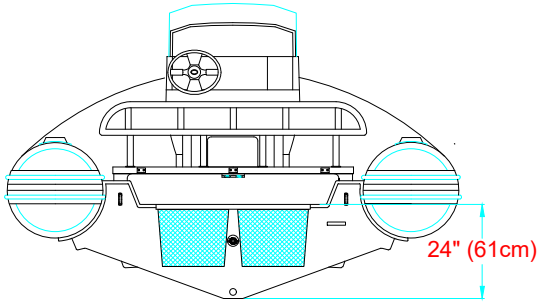

AFT VIEW
VISTA TRASERA

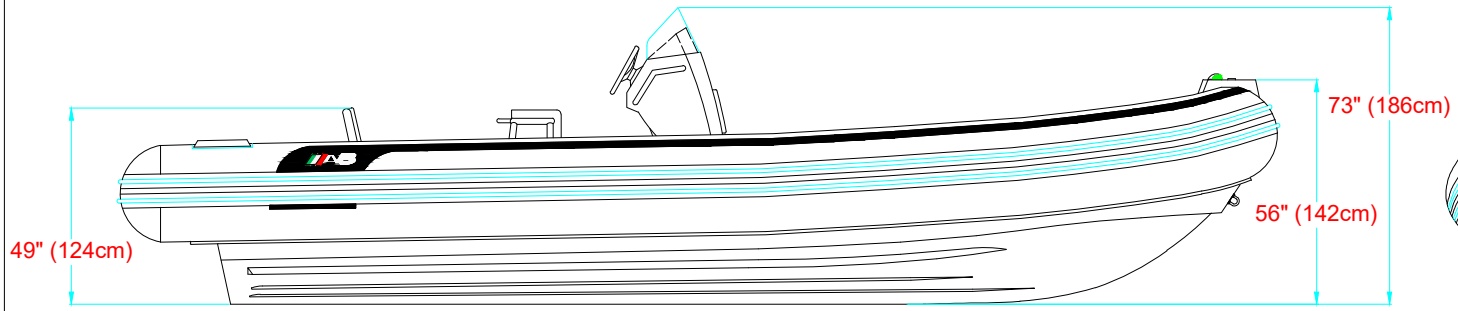

LONGITUDINAL PROFILE
VISTA LATERAL

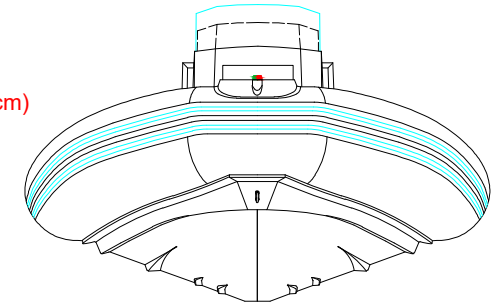

FORE VIEW
VISTA FRONTAL

MAIN PARTICULARS

MAXIMUM LENGHT/ESLORA MAX.	24' (7.31m)
MAXIMUM BEAM/MANGA MAX.	9' 3" (2.82m)

NOTES: 1.-ALL DIMENSIONS IN INCHES & CENTIMETERS
TODAS LAS MEDIDAS ESTAN DADAS EN PULGADAS Y CENTIMETROS

	TITLE: " OCEANUS 24 VST " **GENERAL ARRANGEMENT** **ARREGLO GENERAL**						
SUBJECTED: JAIRO MARTINEZ						DATE 09.02.24	DRAWN HECTOR SUAREZ
APPROVED: HERMES GARCIA	SCALE.	SHEET: 1/1	CODE:	PLAN:	No.REV 6	DATE	APPROVED: