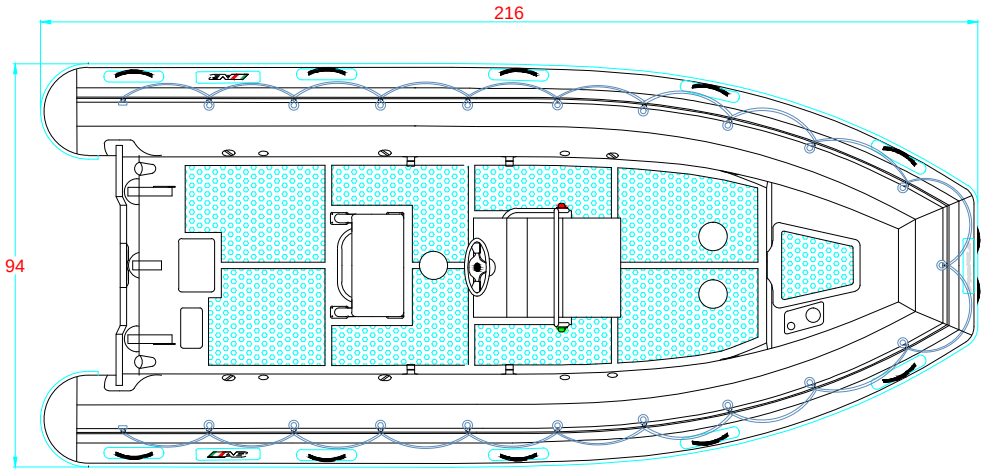

PLANT VIEW
VISTA SUPERIOR

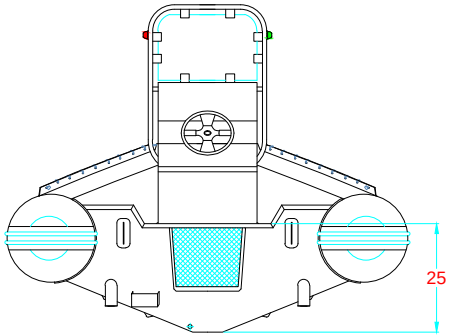

AFT VIEW
VISTA TRASERA

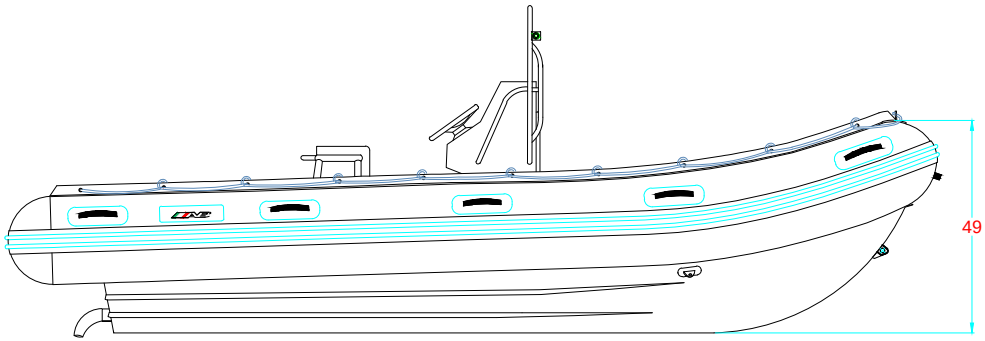

LONGITUDINAL PROFILE
VISTA LATERAL

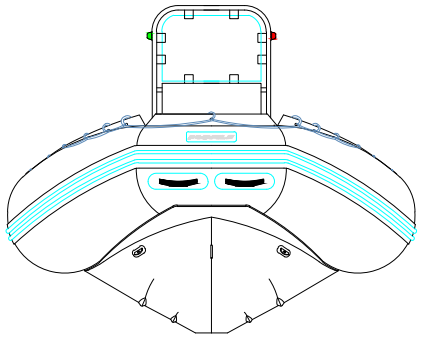

FORE VIEW
VISTA FRONTAL

MAIN PARTICULARS

MAXIMUM LENGHT/ESLORA MAX.	18' (5.49m)
MAXIMUM BEAM/MANGA MAX.	7' 10" (2.4m)

NOTES: **1.-ALL DIMENSIONS IN INCHES**
TODAS LAS MEDIDAS ESTAN DADAS EN PULGADAS

	TITLE: "PROFILE A 18" **GENERAL ARRANGEMENT** **ARREGLO GENERAL**						
SUBJECTED: ALEXANDER BARRIOS						DATE 07.01.16	DRAWN HECTOR SUAREZ
APPROVED: HERMES GARCIA	SCALE.	SHEET: 1/1	CODE:	PLAN:	No.REV 1	DATE	APPROVED: