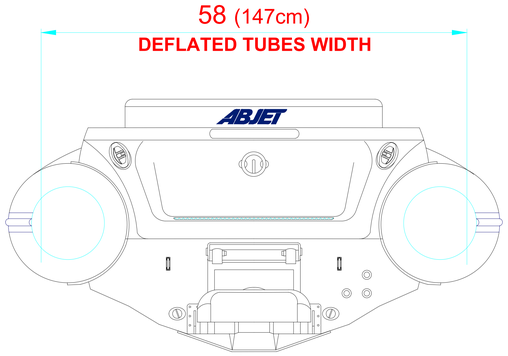

AFT VIEW
VISTA TRASERA

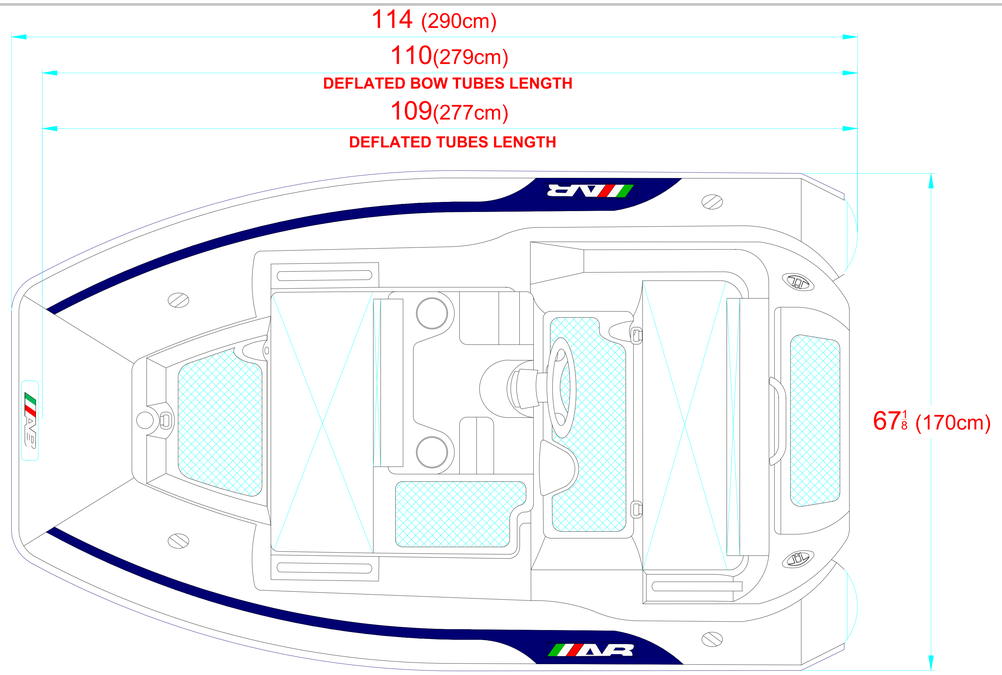

PLANT VIEW
VISTA SUPERIOR

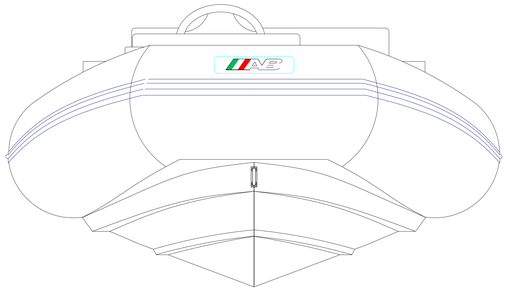

FORE VIEW
VISTA FRONTAL

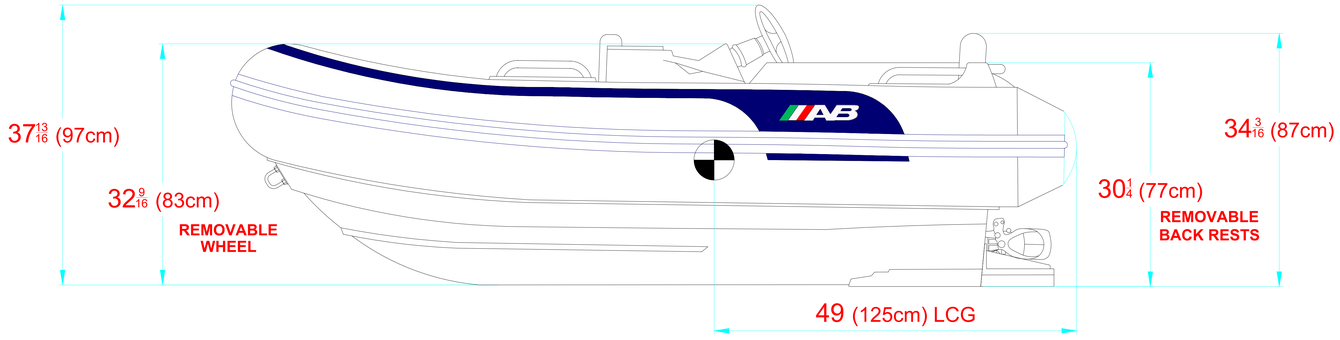

LONGITUDINAL PROFILE
VISTA LATERAL

MAIN PARTICULARS

MAXIMUM LENGHT/ESLORA MAX.	9' 6" (2.90m)
MAXIMUM BEAM/MANGA MAX.	5' 7" (1.70m)

NOTES:

1.-ALL DIMENSIONS IN INCHES & CENTIMETERS
TODAS LAS MEDIDAS ESTAN DADAS EN PULGADAS Y CENTIMETROS

2.- LCG CONSIDERATIONS:
EMPTY FUEL TANK. NO OPTIONAL ACCESSORIES.
CONSIDERACIONES PARA CGL:
TANQUE DE COMBUSTIBLE VACIO. SIN ACCESORIOS OPCIONALES.

SUBJECTED: ALEXANDER BARRIOS	TITLE: "ABJET 290" GENERAL ARRANGEMENT ARREGLO GENERAL					DATE 03.07.19	DRAWN HECTOR SUAREZ
APPROVED: HERMES GARCIA	SCALE.	SHEET: 1/1	CODE:	PLAN:	No.REV 1	DATE	APPROVED: