REV. 1	MARES 12 VSX	515 - 12 - 52

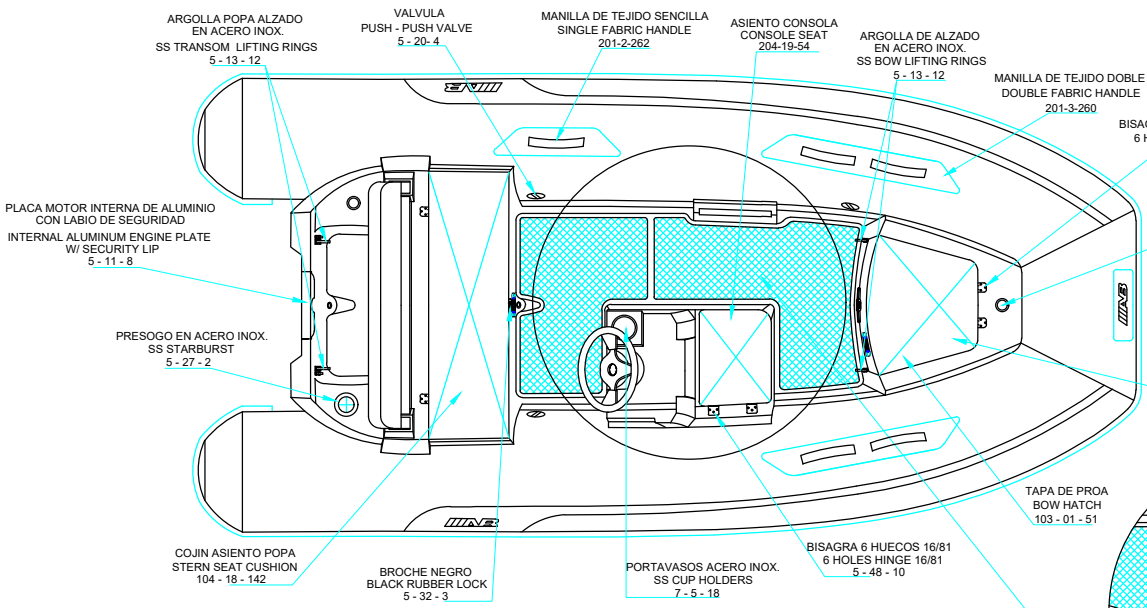

PLANT VIEW
VISTA SUPERIOR

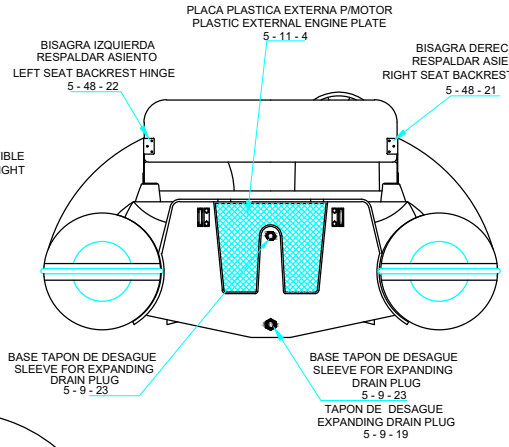

AFT VIEW
VISTA TRASERA

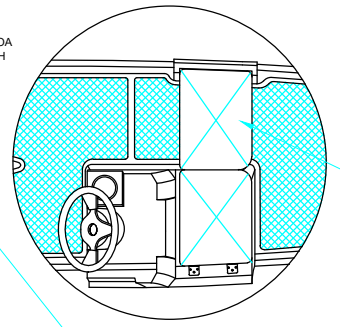

DETAIL FOR
REMOVABLE SEAT

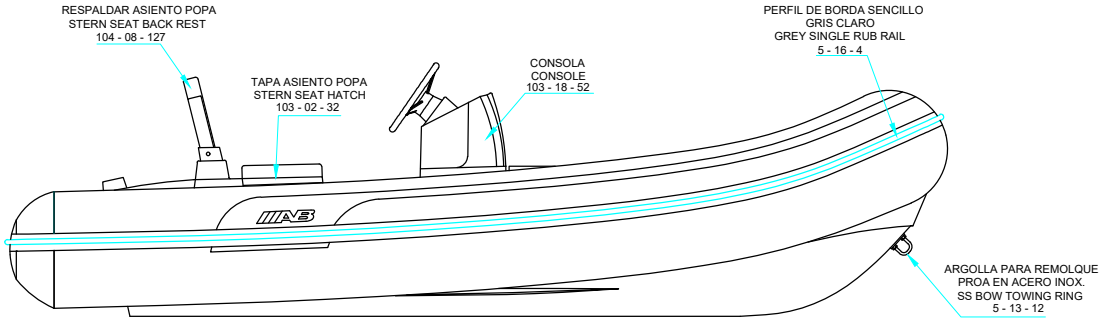

LONGITUDINAL PROFILE
VISTA LATERAL

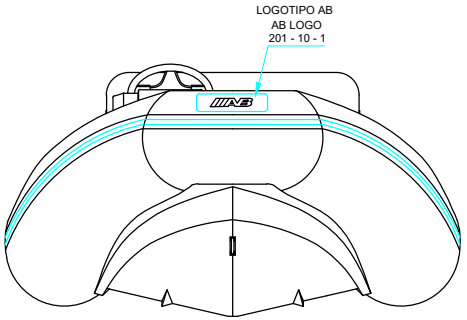

FORE VIEW
VISTA FRONTAL

NOTA: FAVOR INDICAR COLOR DEL BOTE AL ORDENAR / NOTE: MUST INDICATE BOAT COLOR WHEN ORDERING