REV. 1	OCEANUS 24 VST	515 - 13 - 136

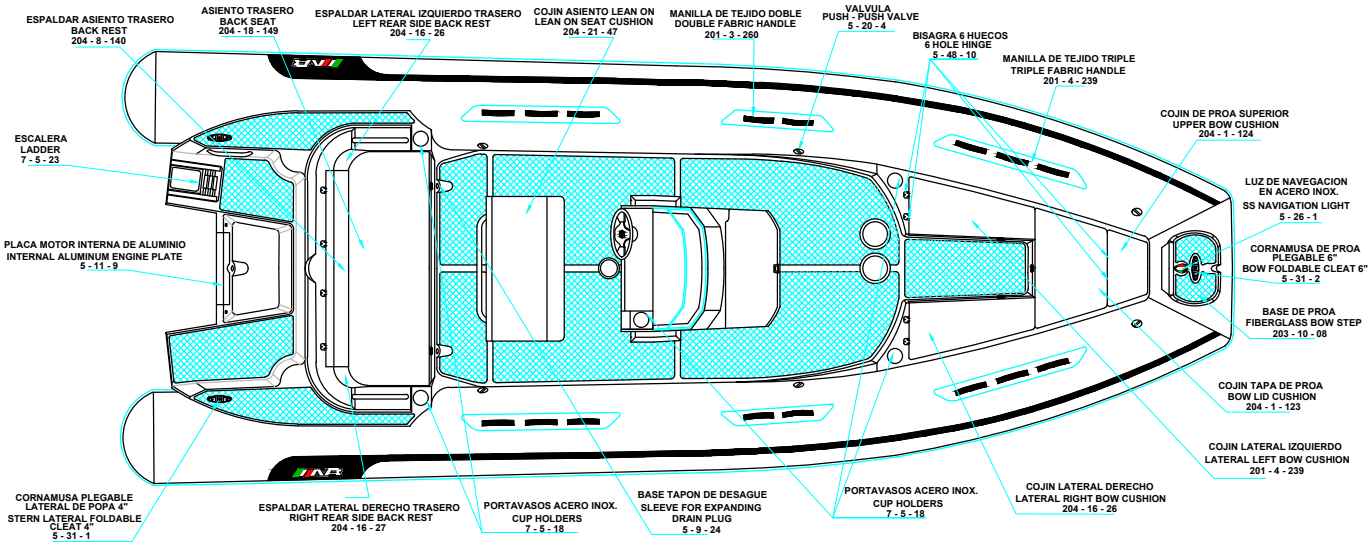

PLANT VIEW
VISTA SUPERIOR

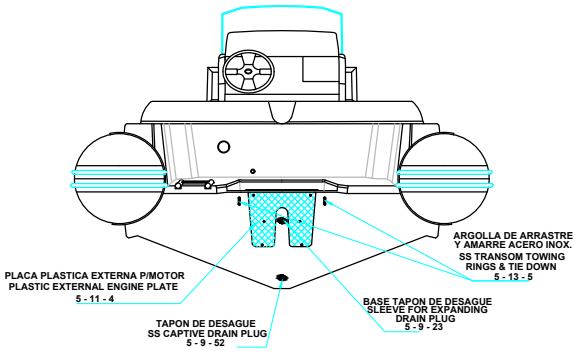

AFT VIEW
VISTA TRASERA

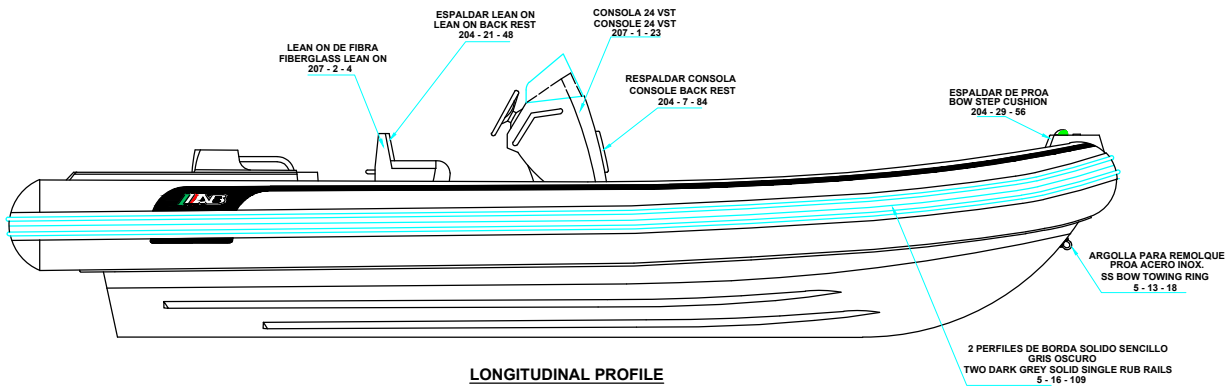

LONGITUDINAL PROFILE
VISTA LATERAL

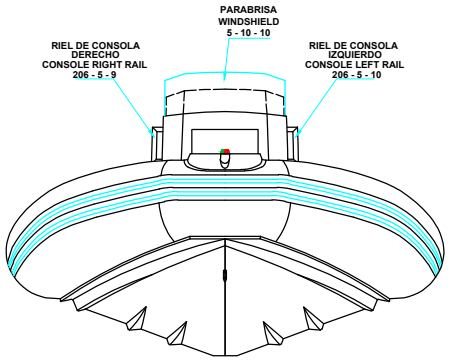

FORE VIEW
VISTA FRONTAL

NOTA: FAVOR INDICAR COLOR DEL BOTE AL ORDENAR / NOTE: MUST INDICATE BOAT COLOR WHEN ORDERING