REV. 3

ABJET 380

515 - 15 - 3

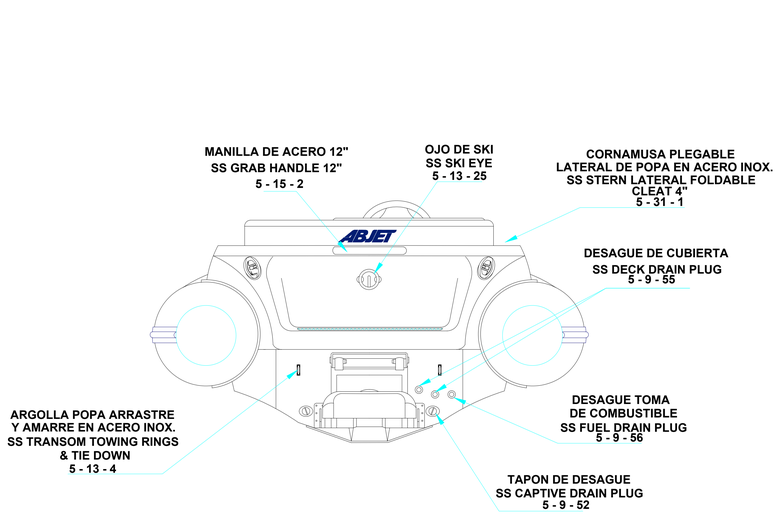

AFT VIEW
VISTA TRASERA

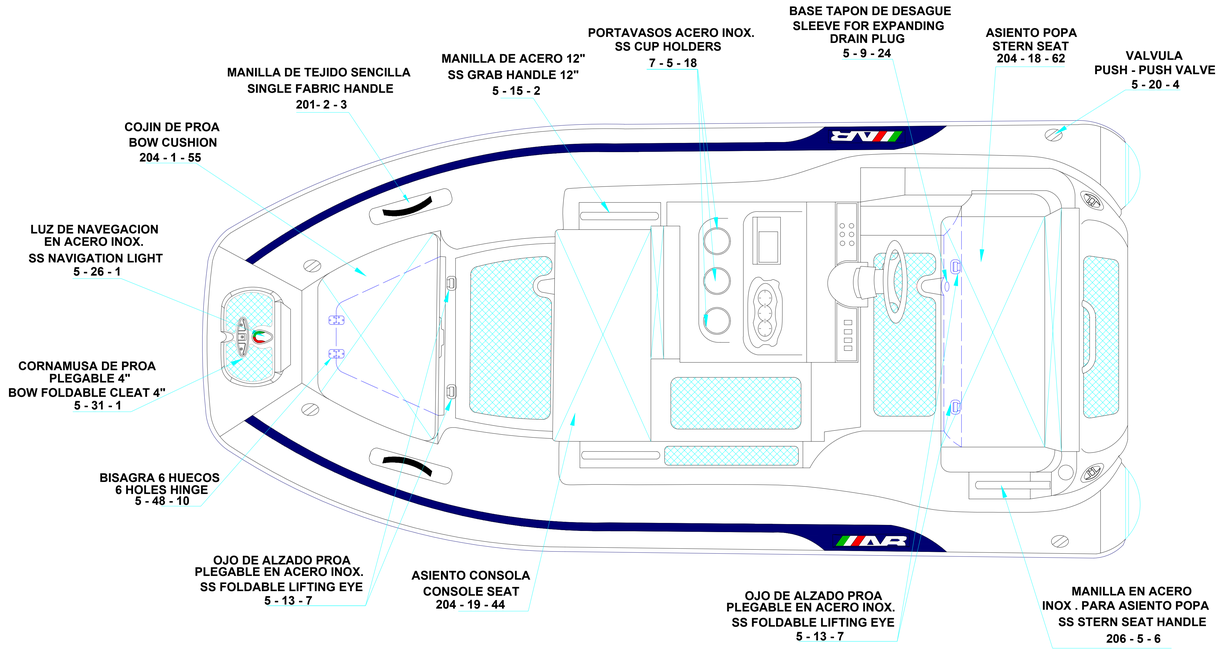

PLANT VIEW
VISTA SUPERIOR

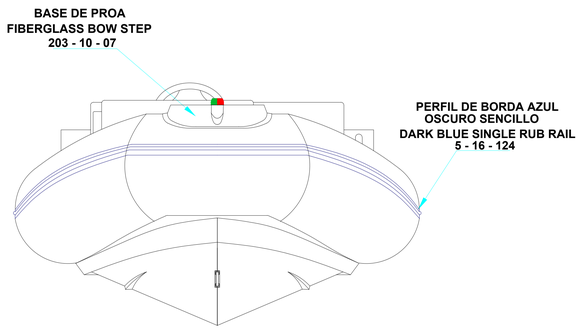

FORE VIEW
VISTA FRONTAL

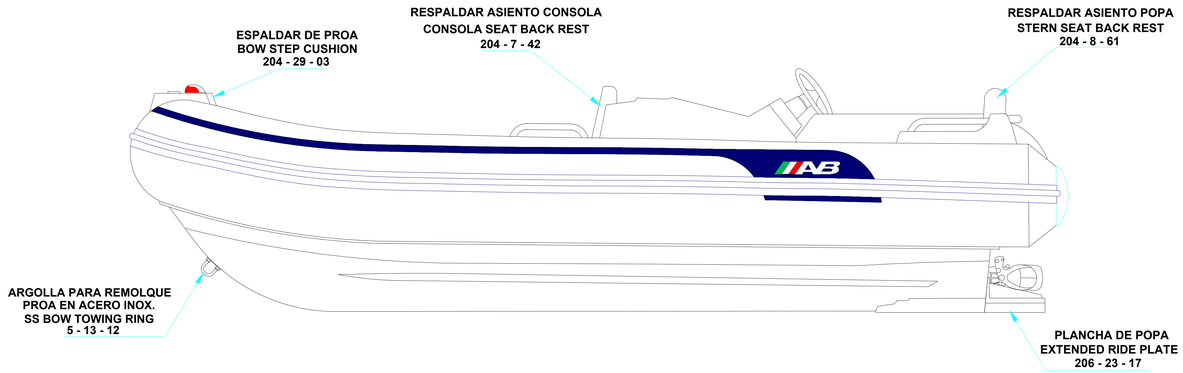

LONGITUDINAL PROFILE
VISTA LATERAL

NOTA: FAVOR INDICAR COLOR DEL BOTE AL ORDENAR / NOTE: MUST INDICATE BOAT COLOR WHEN ORDERING