REV. 3	PROFILE A 24	320 - 8 - 44

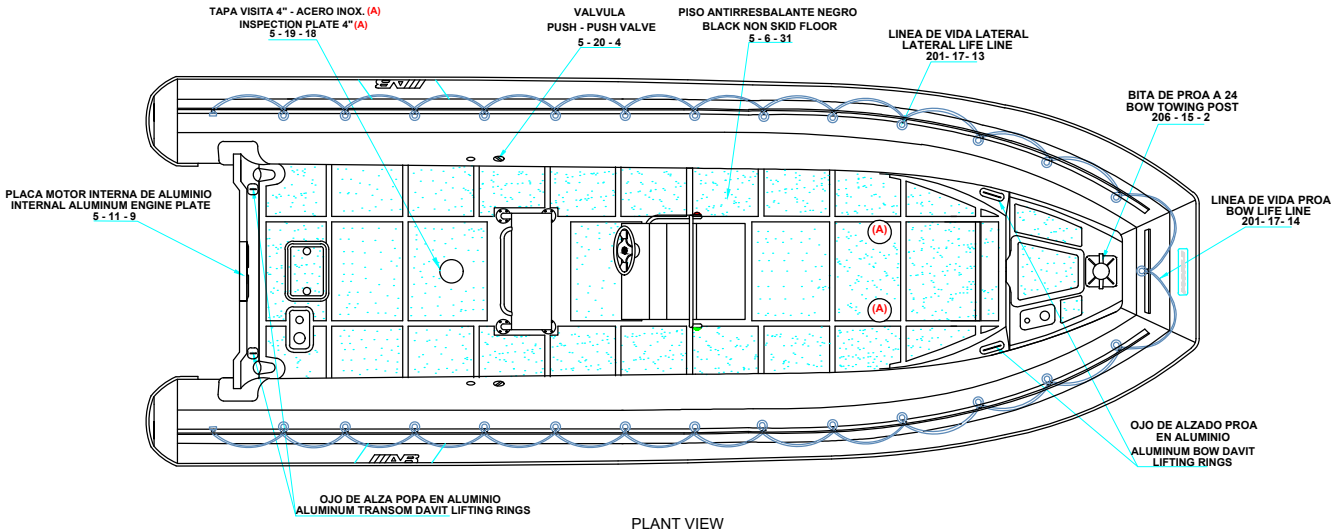

PLANT VIEW
VISTA SUPERIOR

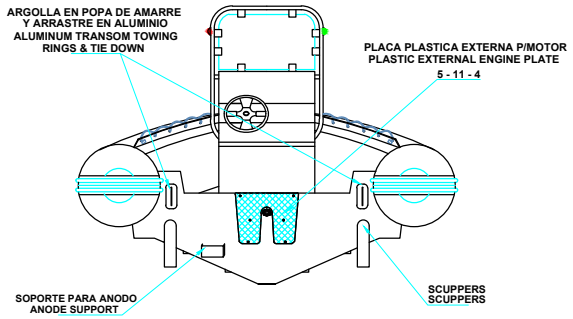

AFT VIEW
VISTA TRASERA

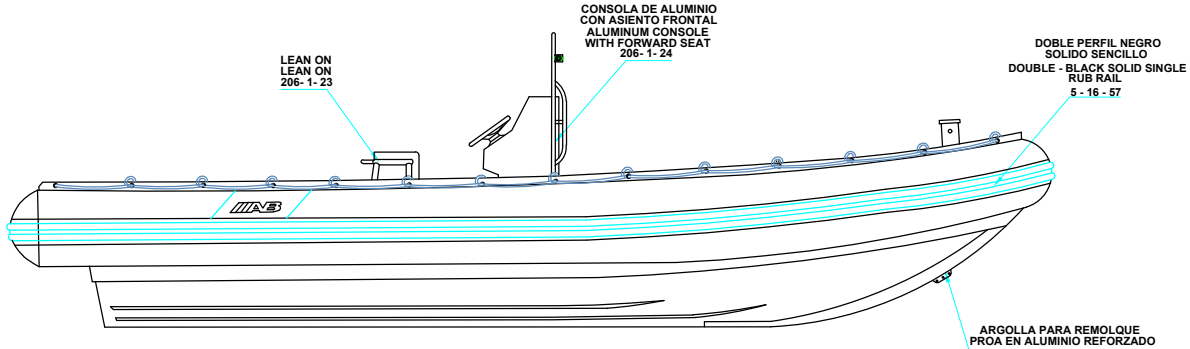

LONGITUDINAL PROFILE
VISTA LATERAL

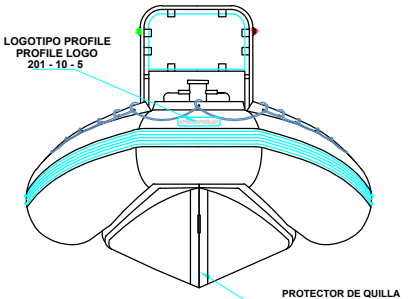

FORE VIEW
VISTA FRONTAL

NOTA: FAVOR INDICAR COLOR DEL BOTE AL ORDENAR / NOTE: MUST INDICATE BOAT COLOR WHEN ORDERING