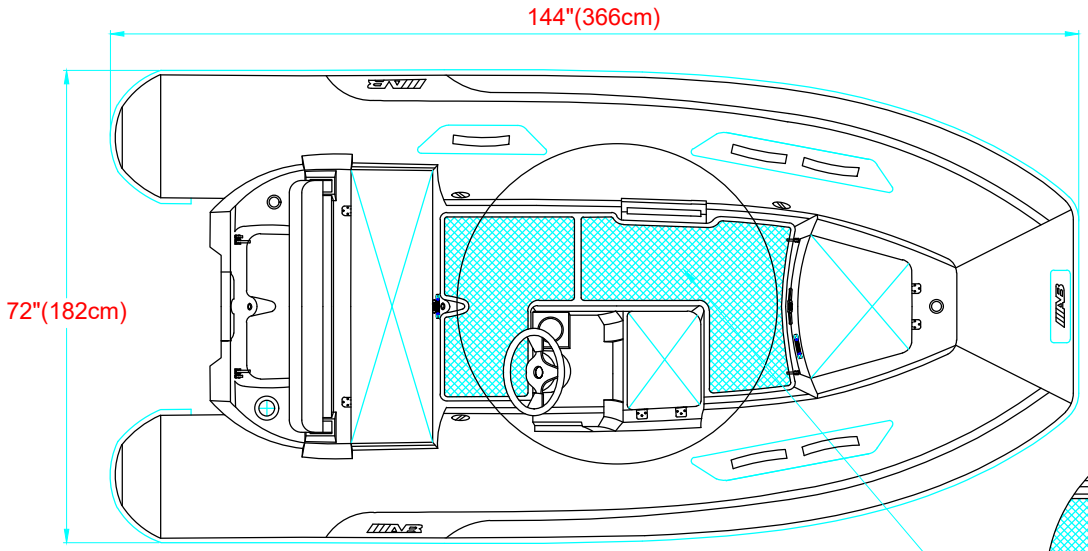

PLANT VIEW
VISTA SUPERIOR

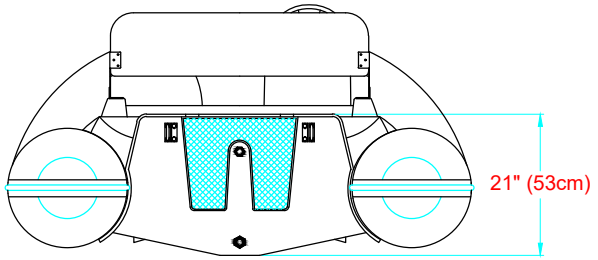

AFT VIEW
VISTA TRASERA

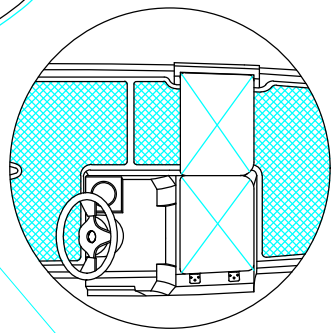

DETAIL FOR
REMOVABLE SEAT

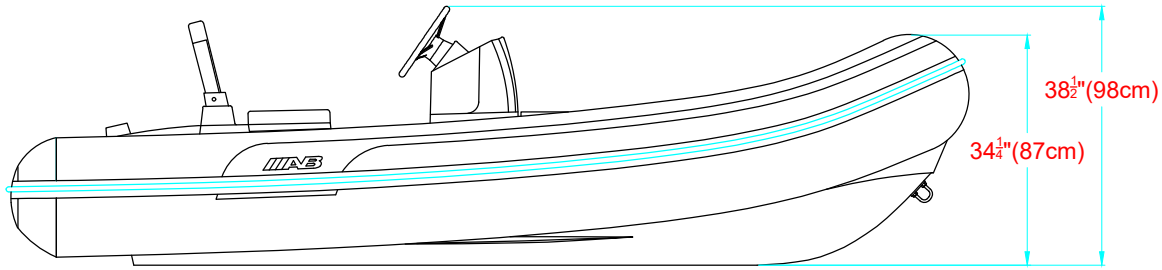

LONGITUDINAL PROFILE
VISTA LATERAL

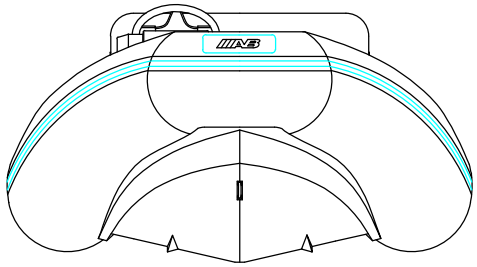

FORE VIEW
VISTA FRONTAL

MAIN PARTICULARS

MAXIMUM LENGTH/ESLORA MAX. _____ 12' (3.66m)

MAXIMUM BEAM/MANGA MAX. _____ 6' (1.82m)

NOTES: 1.-ALL DIMENSIONS IN INCHES
TODAS LAS MEDIDAS ESTAN DADAS EN PULGADAS

	TITLE: "MARES 12 VSX" GENERAL ARRANGEMENT ARREGLO GENERAL						
SUBJECTED: JAIRO MARTINEZ						DATE 05.02.26	DRAWN HECTOR SUAREZ
APPROVED: HERMES GARCIA	SCALE.	SHEET: 1/1	CODE:	PLAN:	No.REV 1	DATE	APPROVED: