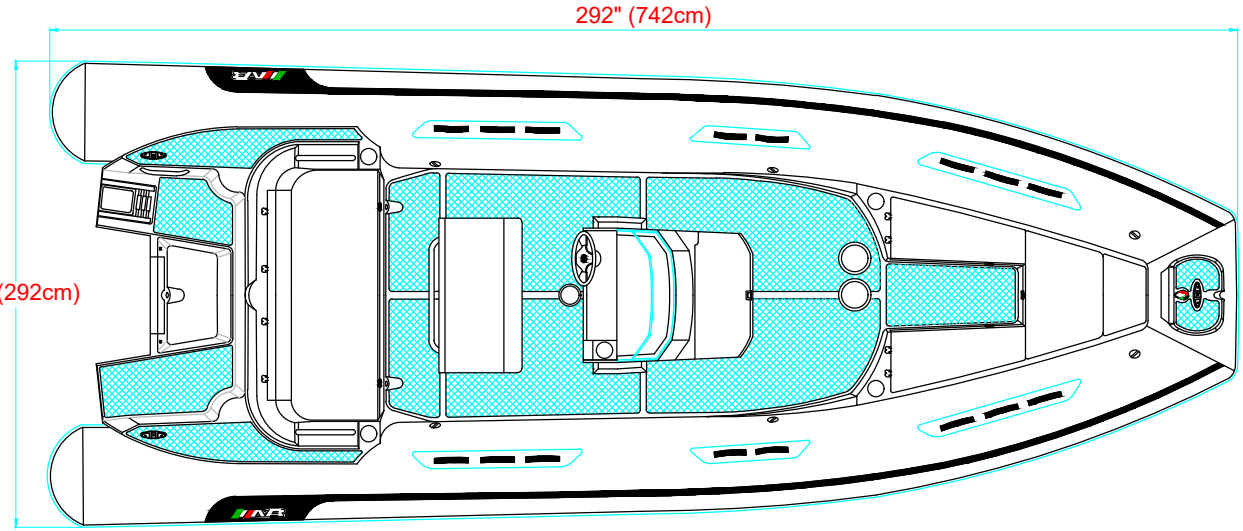

PLANT VIEW
VISTA SUPERIOR

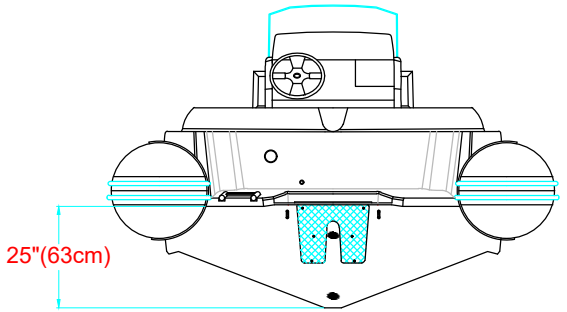

AFT VIEW
VISTA TRASERA

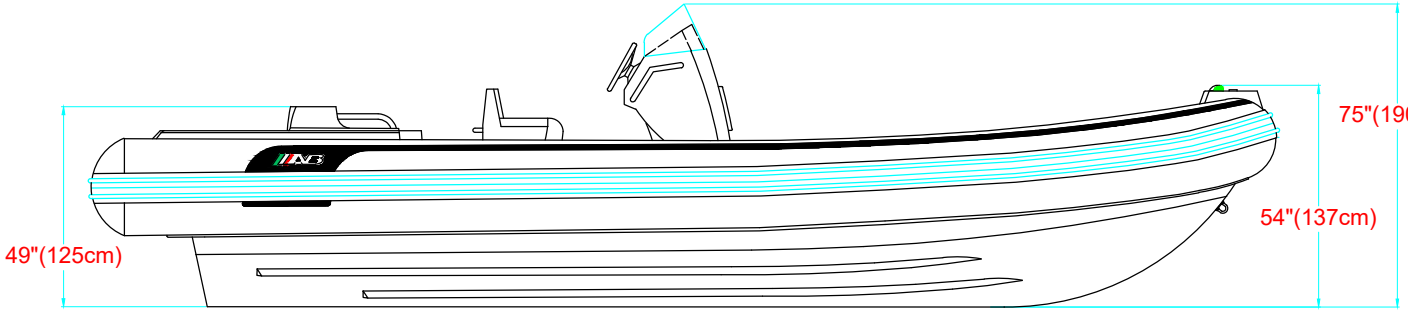

LONGITUDINAL PROFILE
VISTA LATERAL

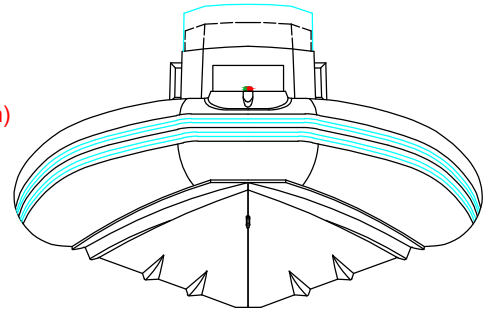

FORE VIEW
VISTA FRONTAL

MAIN PARTICULARS

MAXIMUM LENGHT/ESLORA MAX.	24' 4" (7.42m)
MAXIMUM BEAM/MANGA MAX.	9' 7" (2.92m)

NOTES: 1.-ALL DIMENSIONS IN INCHES & CENTIMETERS
TODAS LAS MEDIDAS ESTAN DADAS EN PULGADAS Y CENTIMETROS

	TITLE: " OCEANUS 24 VST " **GENERAL ARRANGEMENT ARREGLO GENERAL**						
SUBJECTED: JAIRO MARTINEZ						DATE 28.07.26	DRAWN HECTOR SUAREZ
APPROVED: HERMES GARCIA	SCALE.	SHEET: 1/1	CODE:	PLAN:	No.REV 1	DATE	APPROVED: