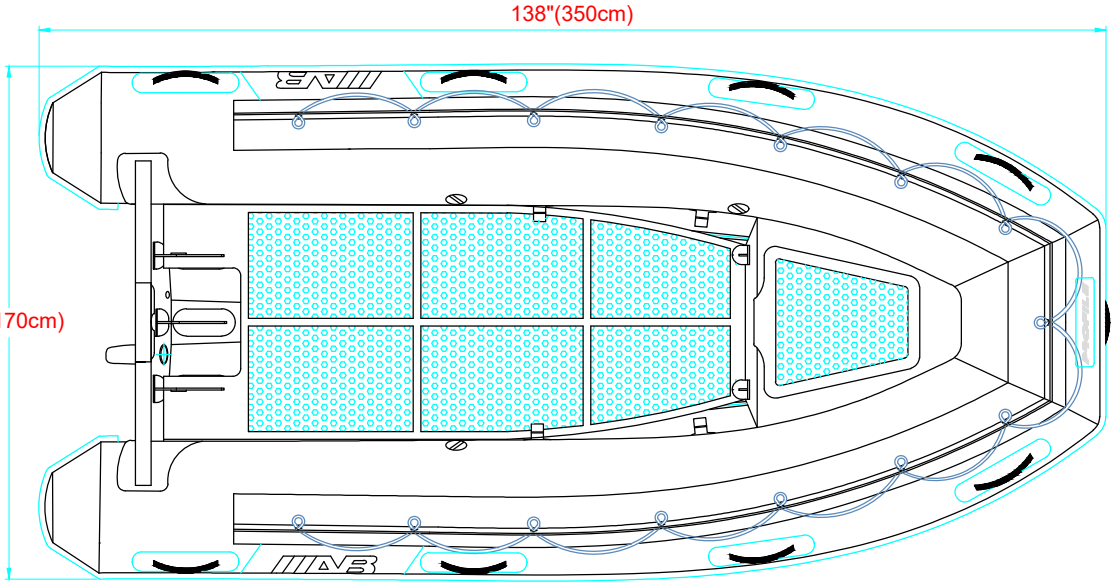

PLANT VIEW
VISTA SUPERIOR

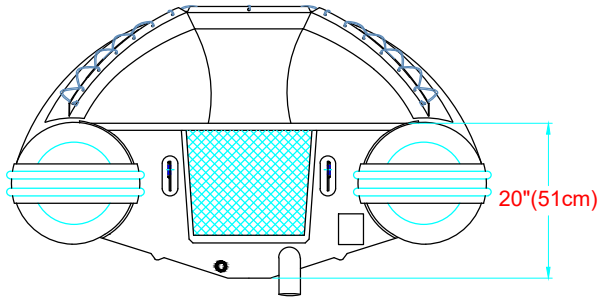

AFT VIEW
VISTA TRASERA

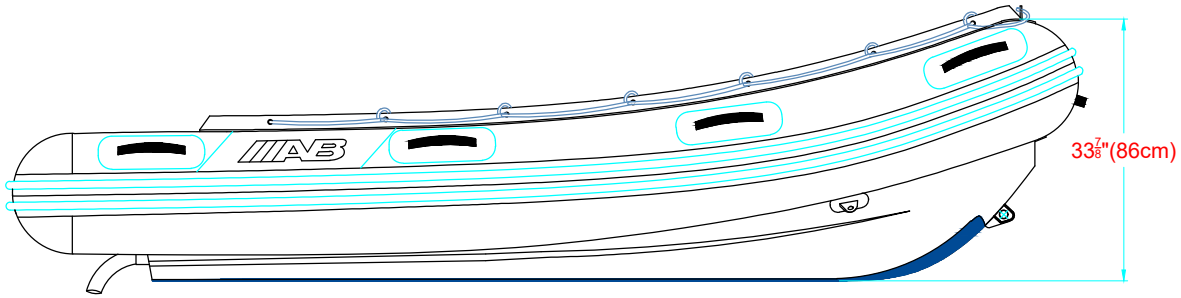

LONGITUDINAL PROFILE
VISTA LATERAL

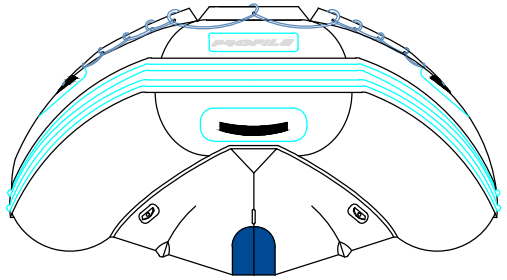

FORE VIEW
VISTA FRONTAL

MAIN PARTICULARS

MAXIMUM LENGHT/ESLORA MAX. _____ 11' 6" (3.50m)
MAXIMUM BEAM/MANGA MAX. _____ 5' 7" (1.70m)

NOTES: 1.-ALL DIMENSIONS IN INCHES & CENTIMETERS
TODAS LAS MEDIDAS ESTAN DADAS EN PULGADAS Y CENTIMETROS

	TITLE: "PROFILE A 11" **GENERAL ARRANGEMENT ARREGLO GENERAL**						
SUBJECTED: ALEXANDRA HERRERA						DATE 18.12.25	DRAWN HECTOR SUAREZ
APPROVED: HERMES GARCIA	SCALE.	SHEET: 1/1	CODE:	PLAN:	No.REV 6	DATE	APPROVED: