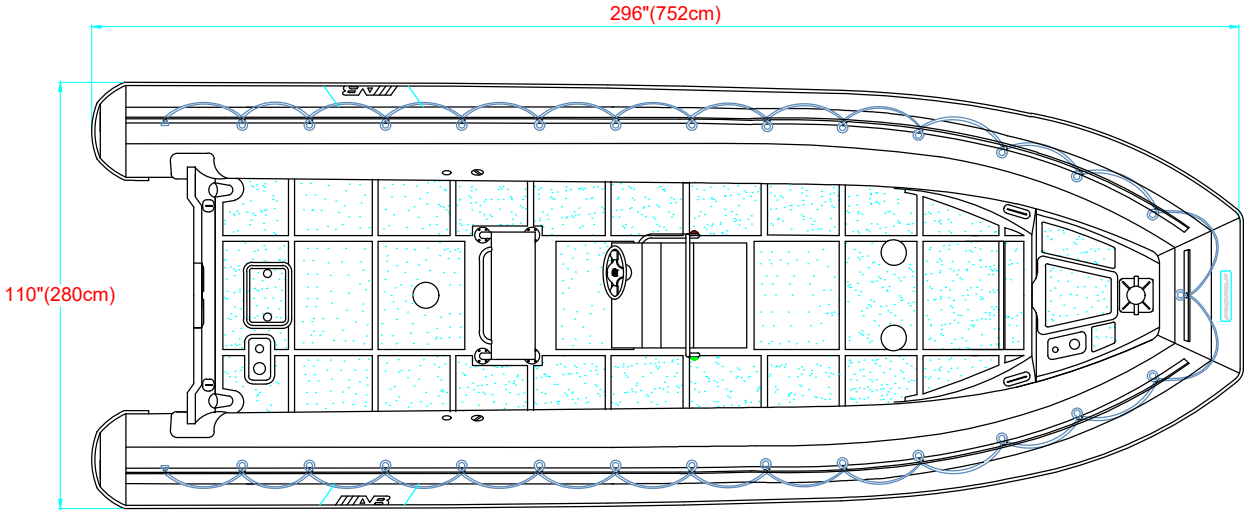

PLANT VIEW
VISTA SUPERIOR

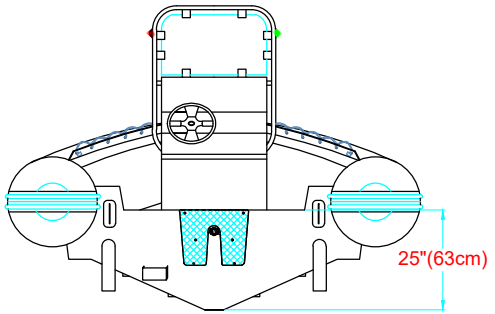

AFT VIEW
VISTA TRASERA

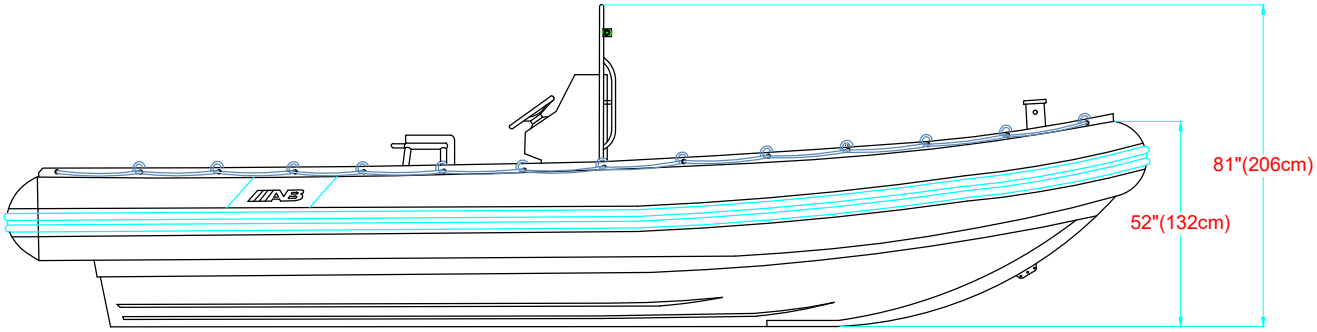

LONGITUDINAL PROFILE
VISTA LATERAL

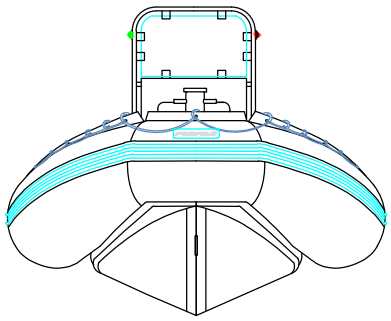

FORE VIEW
VISTA FRONTAL

MAIN PARTICULARS

MAXIMUM LENGHT/ESLORA MAX. _____ 24' 8" (7.52m)
MAXIMUM BEAM/MANGA MAX. _____ 9' 2" (2.8m)

NOTES: 1.-ALL DIMENSIONS IN INCHES & CENTIMETERS
TODAS LAS MEDIDAS ESTAN DADAS EN PULGADAS Y CENTIMETROS

	TITLE: "PROFILE A 24" GENERAL ARRANGEMENT ARREGLO GENERAL						
SUBJECTED: JAIRO MARTINEZ						DATE 10.06.26	DRAWN HECTOR SUAREZ
APPROVED: HERMES GARCIA	SCALE.	SHEET: 1/1	CODE:	PLAN:	No.REV 4	DATE	APPROVED: