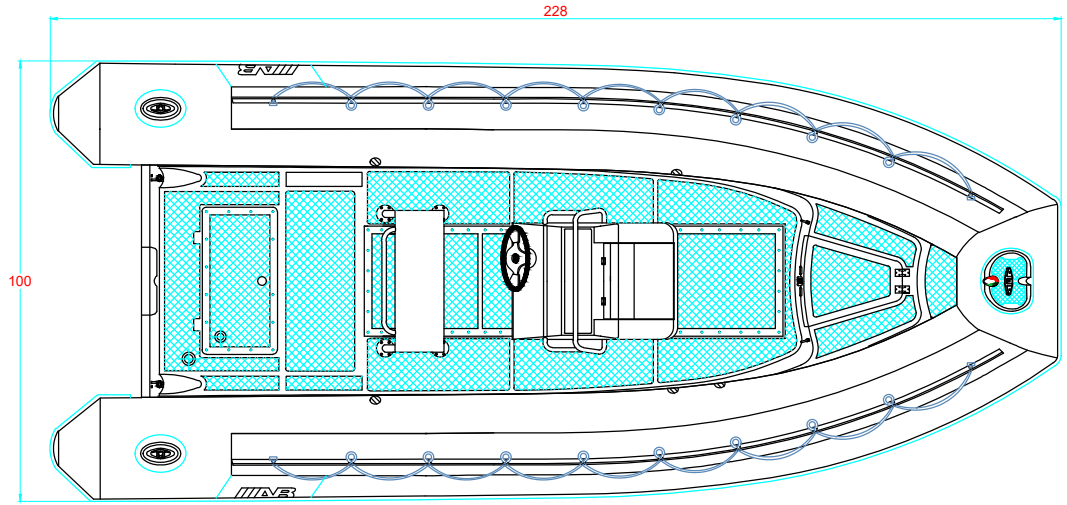

PLANT VIEW
VISTA SUPERIOR

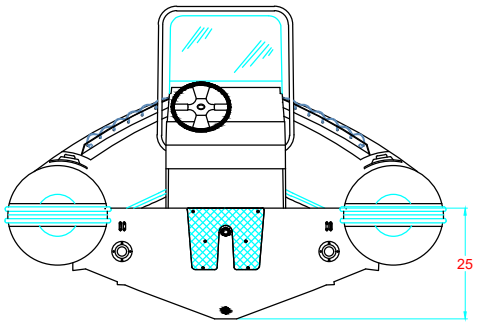

AFT VIEW
VISTA TRASERA

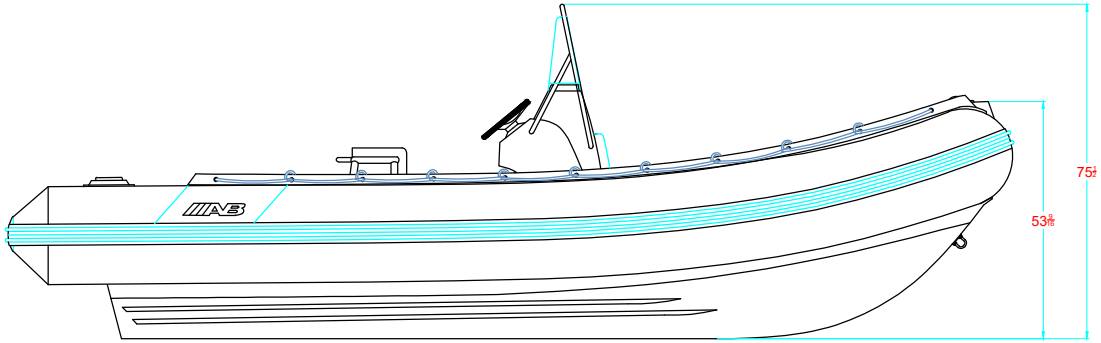

LONGITUDINAL PROFILE
VISTA LATERAL

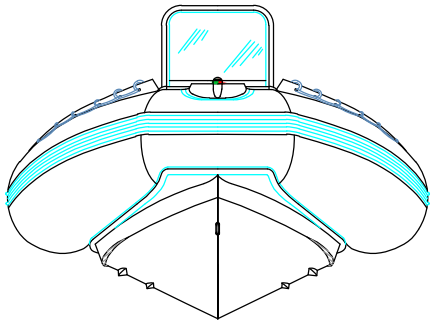

FORE VIEW
VISTA FRONTAL

MAIN PARTICULARS

MAXIMUM LENGHT/ESLORA MAX.	19' (5.79m)
MAXIMUM BEAM/MANGA MAX.	8' 4" (2.53m)

NOTES: 1.-ALL DIMENSIONS IN INCHES
TODAS LAS MEDIDAS ESTAN DADAS EN PULGADAS

	TITLE: "PROFILE F 19" **GENERAL ARRANGEMENT ARREGLO GENERAL**					
SUBJECTED: JAIRO MARTINEZ					DATE 21.06.26	DRAWN HECTOR SUAREZ
APPROVED: HERMES GARCIA	SCALE.	SHEET: 1/1	CODE:	PLAN:	No.REV 4	DATE / APPROVED: