REV. 4	OCEANUS 21 VST	515 - 3 - 111

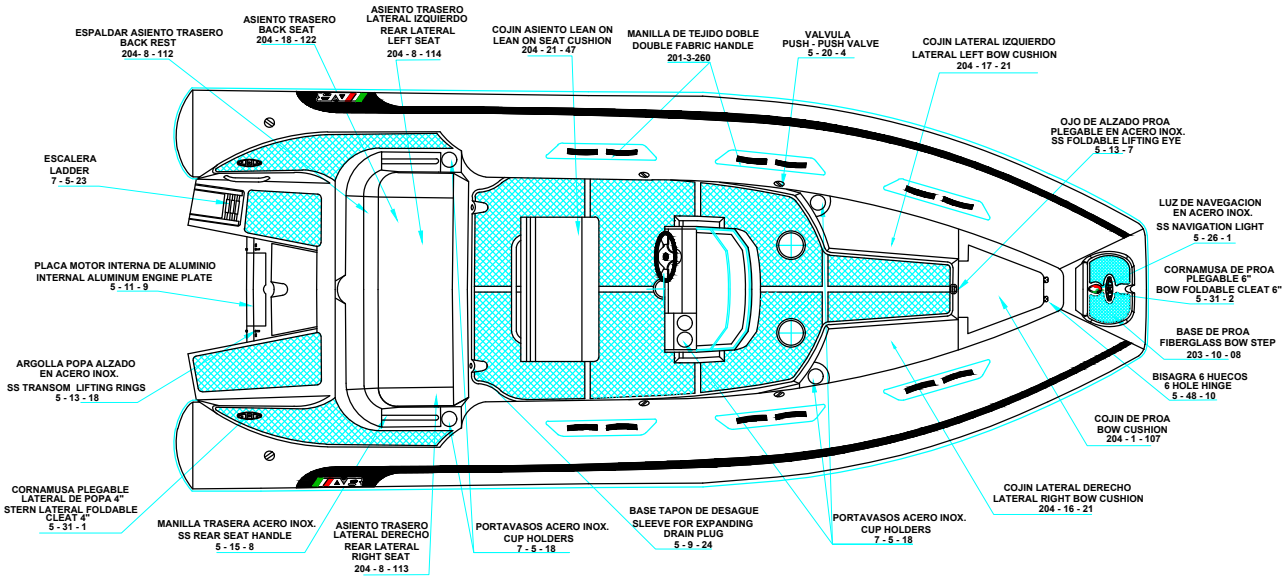

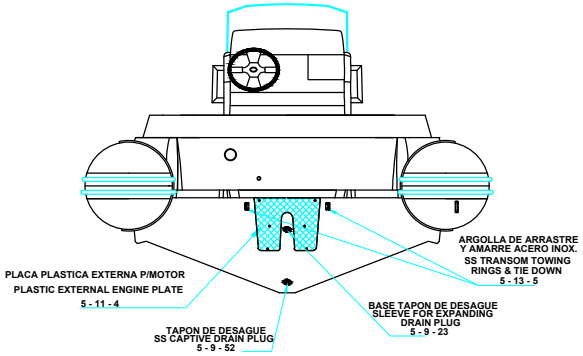

AFT VIEW
VISTA TRASERA

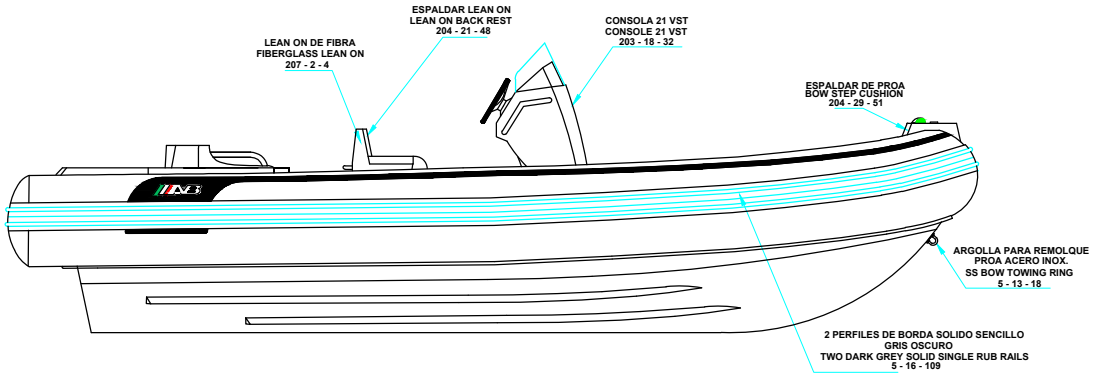

LONGITUDINAL PROFILE
VISTA LATERAL

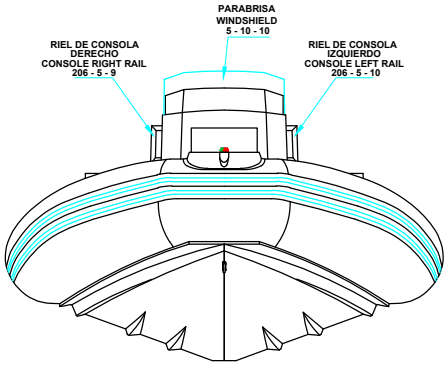

FORE VIEW
VISTA FRONTAL

NOTA: FAVOR INDICAR COLOR DEL BOTE AL ORDENAR / NOTE: MUST INDICATE BOAT COLOR WHEN ORDERING